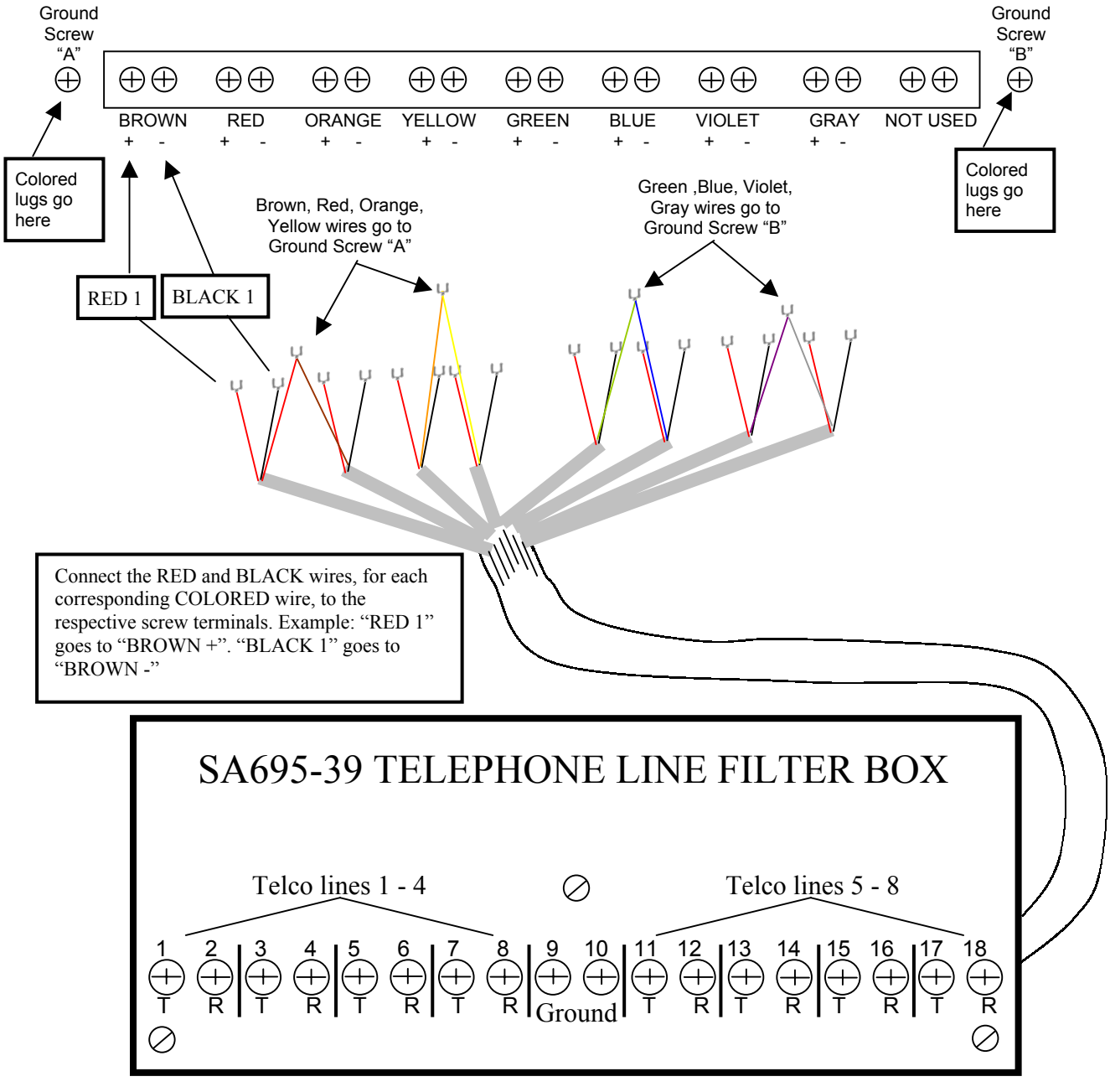685, SA685-39
Connecting the Telephone Line Filter Box